Online data sheet

GTB6-P4231

G6

MINIATURE PHOTOELECTRIC SENSORS

SICK
Sensor Intelligence.

Illustration may differ

Ordering information

Type	Part no.
GTB6-P4231	1079712

Other models and accessories → www.sick.com/G6

Detailed technical data

Features

Sensor/ detection principle	Photoelectric proximity sensor, Background suppression
Dimensions (W x H x D)	12 mm x 31.5 mm x 21 mm
Housing design (light emission)	Rectangular
Sensing range max.	5 mm ... 400 mm [1]
Sensing range	50 mm ... 220 mm
Type of light	Visible red light
Light source	PinPoint LED [2]
Light spot size (distance)	Ø 6 mm (100 mm)
Wave length	625 nm
Adjustment	Mechanical spindle, 5 turns

[1] Object with 90 % reflectance (referred to standard white, DIN 5033).
[2] Average service life: 100,000 h at T_U = +25 °C.

Mechanics/electronics

Supply voltage	10 V DC ... 30 V DC [1]
Ripple	± 10 % [2]

[1] Limit values when operated in short-circuit protected network: max. 8 A.
[2] May not exceed or fall below U_V tolerances.
[3] Without load.
[4] At Uv > 24 V, IA max. = 50 mA.
[5] Signal transit time with resistive load.
[6] With light/dark ratio 1:1.
[7] A = V_S connections reverse-polarity protected.
[8] B = inputs and output reverse-polarity protected.
[9] D = outputs overcurrent and short-circuit protected.
[10] Temperature stability following adjustment +/-10 °C.

Power consumption	32 mA [3]
Switching output	PNP
Switching mode	Light/dark switching
Switching mode selector	Selectable via light/dark selector
Signal voltage NPN HIGH/LOW	Approx. V_S / ≤ 3 V
Output current $I_{max.}$	≤ 100 mA [4]
Response time	< 1.2 ms [5]
Switching frequency	500 Hz [6]
Connection type	Male connector M8, 4-pin
Circuit protection	A [7] B [8] D [9]
Protection class	III
Weight	60 g
Housing material	Plastic, ABS/PC
Optics material	Plastic, PMMA
Enclosure rating	IP67
Ambient operating temperature	–25 °C ... +55 °C [10]
Ambient storage temperature	–40 °C ... +70 °C
UL File No.	NRKH.E348498 & NRKH7.E348498

[1] Limit values when operated in short-circuit protected network: max. 8 A.
[2] May not exceed or fall below U_V tolerances.
[3] Without load.
[4] At Uv > 24 V, IA max. = 50 mA.
[5] Signal transit time with resistive load.
[6] With light/dark ratio 1:1.
[7] A = V_S connections reverse-polarity protected.
[8] B = inputs and output reverse-polarity protected.
[9] D = outputs overcurrent and short-circuit protected.
[10] Temperature stability following adjustment +/-10 °C.

Classifications

ECl@ss 5.0	27270904
ECl@ss 5.1.4	27270904
ECl@ss 6.0	27270904
ECl@ss 6.2	27270904
ECl@ss 7.0	27270904
ECl@ss 8.0	27270904
ECl@ss 8.1	27270904
ECl@ss 9.0	27270904
ETIM 5.0	EC002719
ETIM 6.0	EC002719
UNSPSC 16.0901	39121528

Adjustments possible

Adjustment possibility

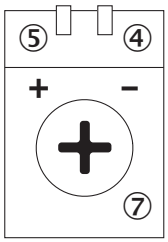

④ LED indicator green: Supply voltage active
⑤ LED indicator yellow: Status of received light beam
⑦ Sensitivity control: potentiometer

Connection diagram

Cd-066

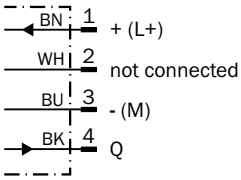

Characteristic curve

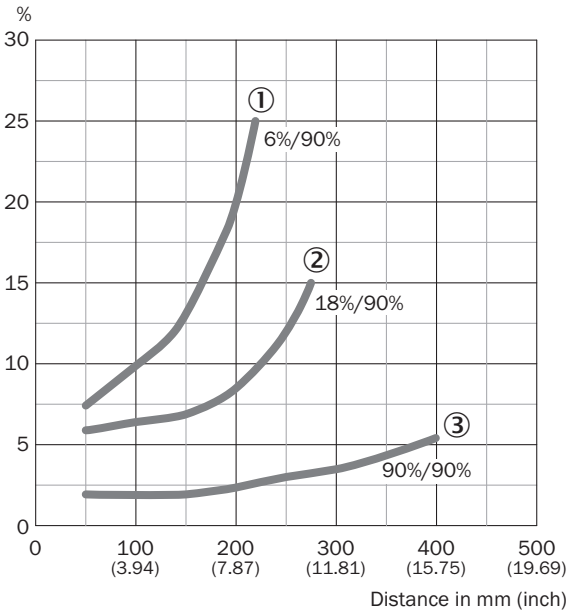

① Sensing range on black, 6% remission
② Sensing range on gray, 18 % remission
③ Object with 90% remission (based on standard white DIN 5033)

Light spot size

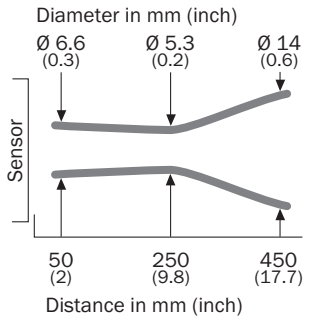

Sensing range diagram

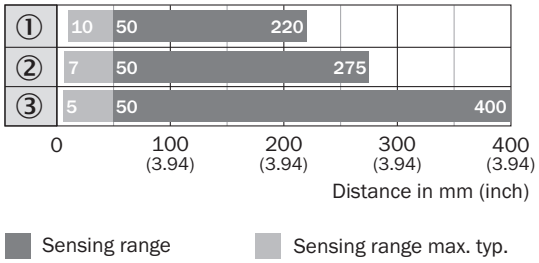

① Sensing range on black, 6 % remission
② Sensing range on grey, 18 % remission
③ Sensing range on white, 90 % Remission

Dimensional drawing (Dimensions in mm (inch))

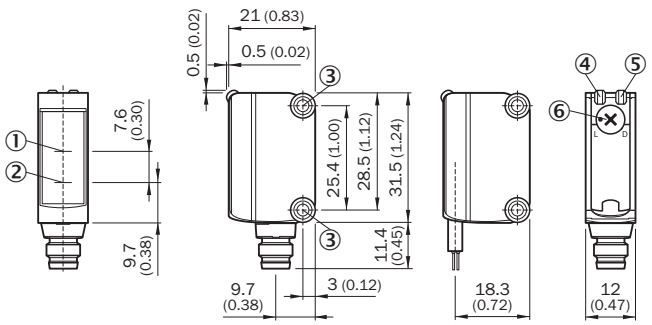

① Optical axis, receiver
② Optical axis, sender
③ Mounting holes M3
④ LED indicator green: Supply voltage active
⑤ LED indicator yellow: Status of received light beam
⑥ Light/ dark rotary switch: L = light switching, D = dark switching

Recommended accessories

Other models and accessories ➜ www.sick.com/G6

	Brief description	Type	Part no.
Universal bar clamp systems			
	Clamp bar to fix G6 and W16 sensors on rods of 10 mm, clamp-on design up to 4 mm wall thickness, aluminum (clamp bar), stainless steel (bracket), clamp bar mounting and clamp function, mounting bracket, mounting hardware	BEF-KHS-ISG6	2075080
Device protection (mechanical)			
	Stainless steel 1.4301 (SVS 304), 3 mm thick protective sleeve for G6, stainless steel 1.4301, mounting hardware included	BEF-SG-G6-01	2069044
Mounting brackets and plates			
	Stainless steel (1.4301)	BEF-WN-G6	2062909
Plug connectors and cables			
	Head A: female connector, M8, 4-pin, straight, A-coded Head B: Flying leads Cable: Sensor/actuator cable, PVC, unshielded, 2 m	YF8U14-020VA3XLEAX	2095888
	Head A: female connector, M8, 4-pin, straight, A-coded Head B: Flying leads Cable: Sensor/actuator cable, PVC, unshielded, 5 m	YF8U14-050VA3XLEAX	2095889
	Head A: female connector, M8, 4-pin, angled, A-coded Head B: Flying leads Cable: Sensor/actuator cable, PVC, unshielded, 2 m	YG8U14-020VA3XLEAX	2095962
	Head A: female connector, M8, 4-pin, angled, A-coded Head B: Flying leads Cable: Sensor/actuator cable, PVC, unshielded, 5 m	YG8U14-050VA3XLEAX	2095963
	Head A: female connector, M8, 4-pin, straight Head B: - Cable: unshielded	DOS-0804-G	6009974
	Head A: female connector, M8, 4-pin, angled Head B: - Cable: unshielded	DOS-0804-W	6009975
Masks			
	Slit mask, vertical slots, slot width: 1.0 mm, 2 pieces, black, Aluminum, Slit mask (2 pieces)	BEF-SLIT MASK-G6	2075254

SICK AT A GLANCE

SICK is one of the leading manufacturers of intelligent sensors and sensor solutions for industrial applications. A unique range of products and services creates the perfect basis for controlling processes securely and efficiently, protecting individuals from accidents and preventing damage to the environment.

We have extensive experience in a wide range of industries and understand their processes and requirements. With intelligent sensors, we can deliver exactly what our customers need. In application centers in Europe, Asia and North America, system solutions are tested and optimized in accordance with customer specifications. All this makes us a reliable supplier and development partner.

Comprehensive services complete our offering: SICK LifeTime Services provide support throughout the machine life cycle and ensure safety and productivity.

For us, that is “Sensor Intelligence.”

WORLDWIDE PRESENCE:

Contacts and other locations –www.sick.com

SICK
Sensor Intelligence.